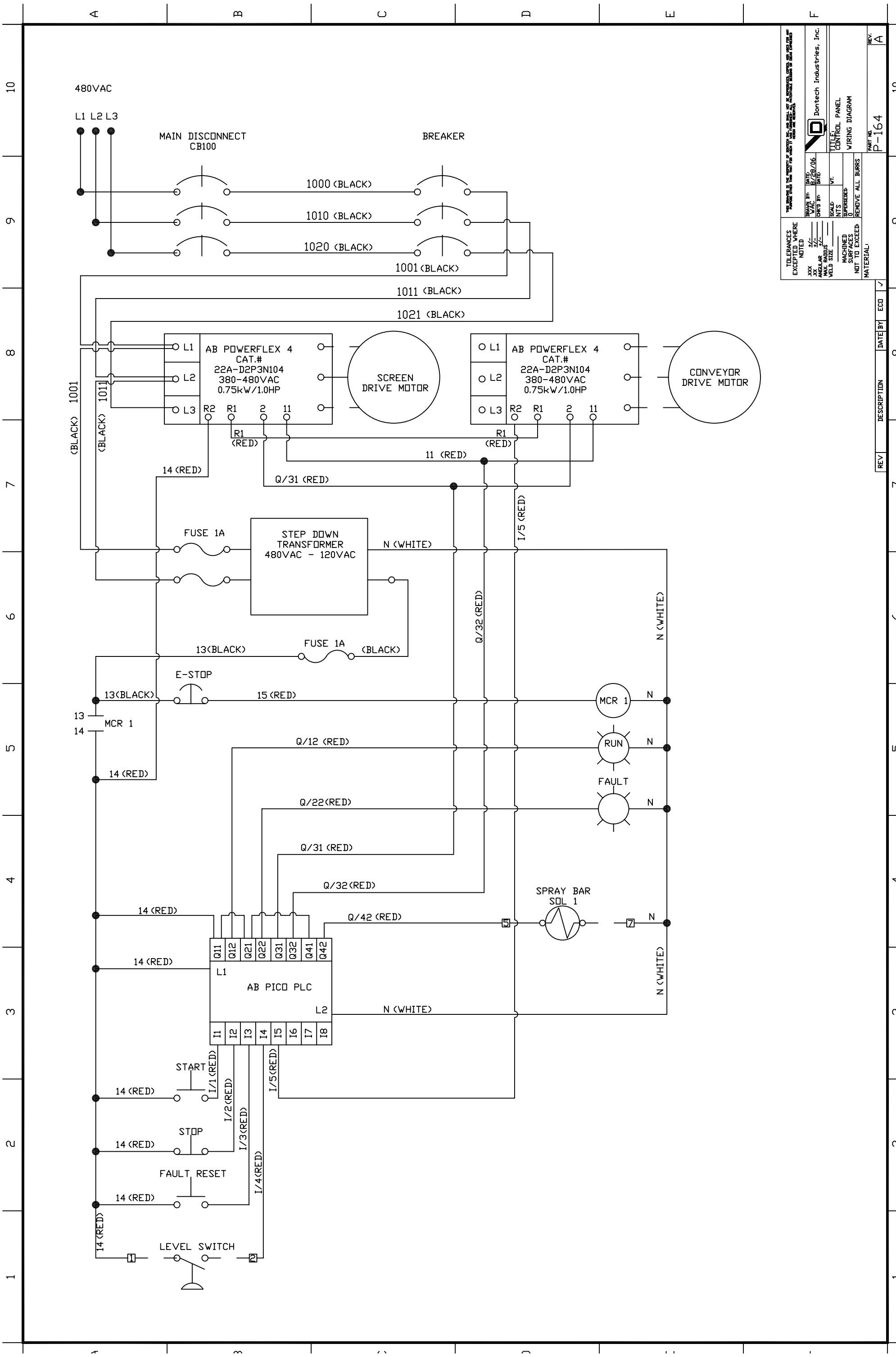
480VAC
L1 L2 L3
MAIN DISCONNECT
CB100
BREAKER
1000 (BLACK)
1010 (BLACK)
1020 (BLACK)
1001 (BLACK)
1011 (BLACK)
1021 (BLACK)
AB POWERFLEX 4
CAT.#
22A-D2P3N104
380-480VAC
0.75kW/1.0HP
L1
L2
L3
R2 R1 2 11
SCREEN
DRIVE MOTOR
CONVEYOR
DRIVE MOTOR
R1
(RED)
11 (RED)
14 (RED)
Q/31 (RED)
I/5 (RED)
FUSE 1A
STEP DOWN
TRANSFORMER
480VAC - 120VAC
N (WHITE)
Q/32 (RED)
13(BLACK)
(BLACK)
E-STOP
15 (RED)
MCR 1
13
14
N
RUN
FAULT
Q/12 (RED)
Q/22(RED)
Q/42 (RED)
SPRAY BAR
SOL 1
Q11 Q12 Q21 Q22 Q31 Q32 Q41 Q42
AB PICO PLC
I1 I2 I3 I4 I5 I6 I7 I8
START
I/1 (RED)
I/2(RED)
I/3(RED)
I/4(RED)
I/5(RED)
STOP
FAULT RESET
LEVEL SWITCH
1
2
5
7
TOLERANCES
EXCEPTED WHERE
NOTED
.XXX ±/-
.XX ±/-
ANGULAR ±/-
MAX. RADIUS
WELD SIZE
MACHINED
SURFACES
NOT TO EXCEED
MATERIAL:
DRAWN BY: WAC
DATE: 8/28/06
CHK'D BY:
DATE:
SCALE: NTS
WT:
SUPERSEDES: 0
REMOVE ALL BURRS
Dontech Industries, Inc.
TITLE: CONTROL PANEL
WIRING DIAGRAM
PART NO. P-164
REV. A
REV
DESCRIPTION
DATE
BY
ECO