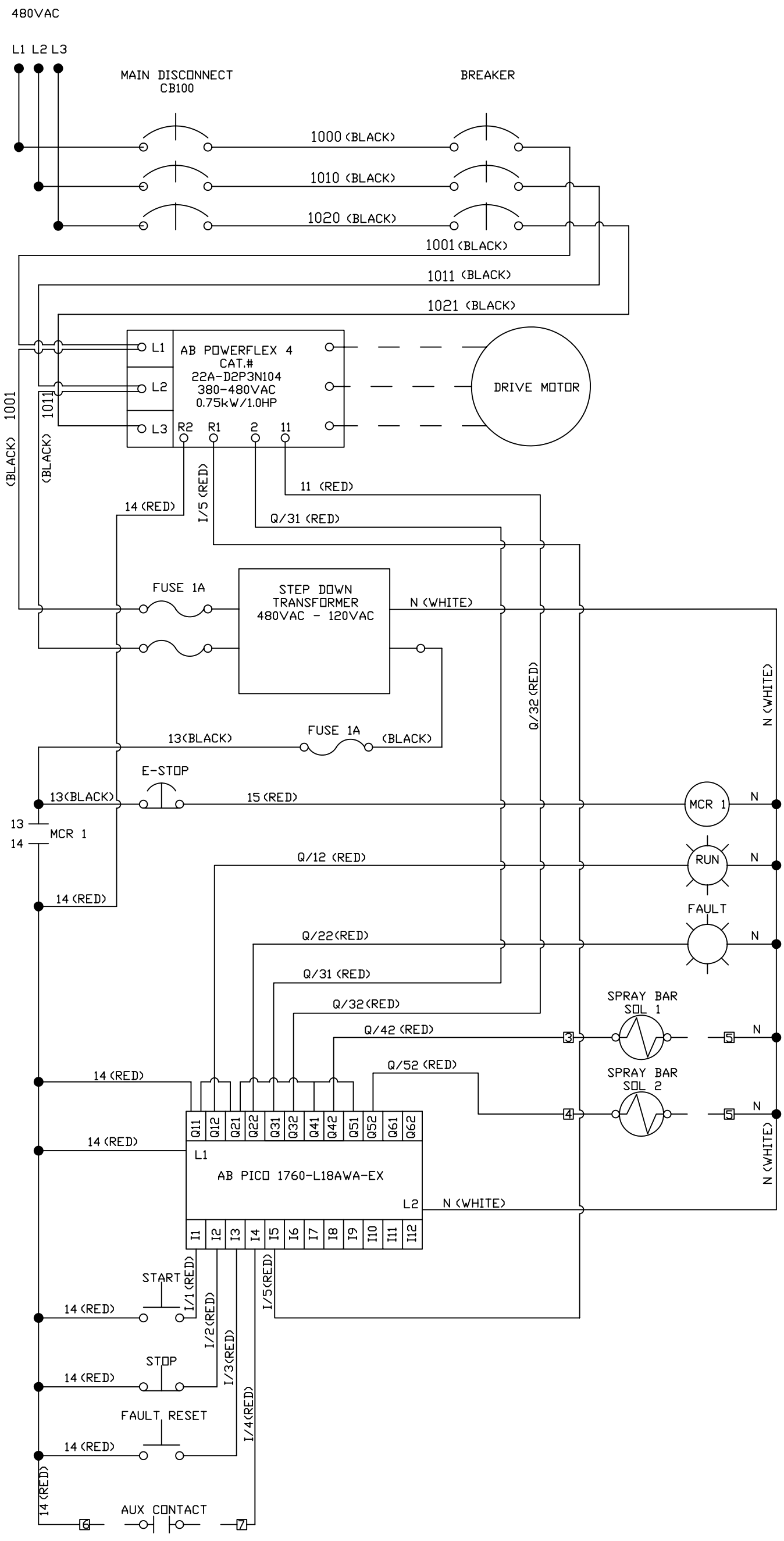

THIS DRAWING IS THE PROPERTY OF DONTECH INC. AND SHALL NOT BE REPRODUCED, COPIED, NOR USED FOR ANY PURPOSE OTHER THAN THAT FOR WHICH IT WAS FURNISHED. ALL PATENTABLE DESIGNS OR IDEAS EXPRESSED HEREIN ARE RESERVED.

Dontech Industries, Inc.

DRAWN BY: MAC — DATE: 8/28/06
CHK'D BY: — DATED: —
SCALE: NTS — WT.
SUPERSEDES:
REMOVE ALL BURRS

TITLE: CONTROL PANEL WIRING DIAGRAM

PART NO. P-212 — REV. A

TOLERANCES EXCEPTED WHERE NOTED
.XXX ±/-
.XX ±/-
ANGULAR ±/-
MAX RADIUS
WELD SIZE
MACHINED SURFACES NOT TO EXCEED:
MATERIAL:

REV	DESCRIPTION	DATE	BY	ECO