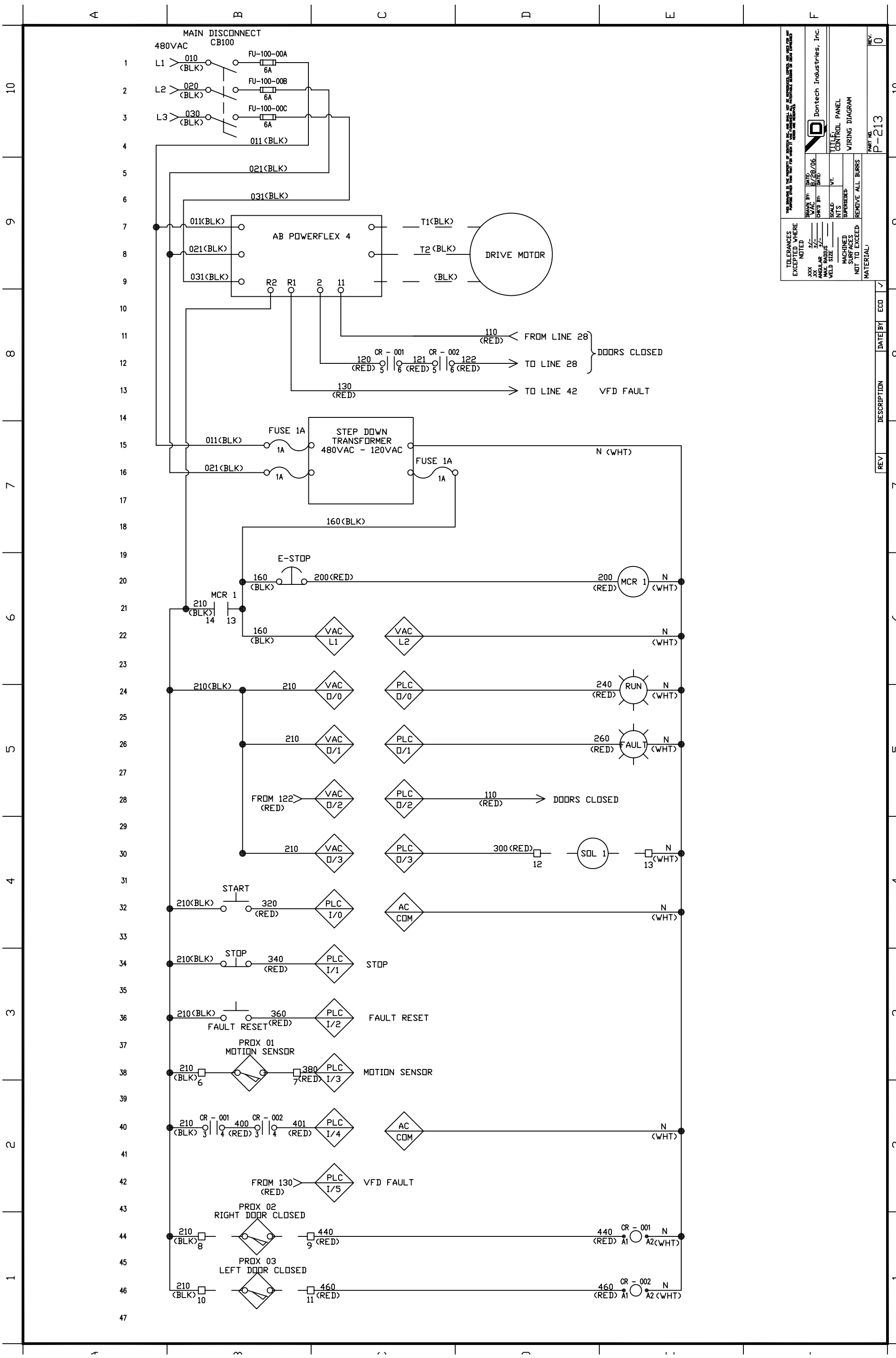
MAIN DISCONNECT
CB100
480VAC
L1
L2
L3
010 (BLK)
020 (BLK)
030 (BLK)
FU-100-00A
FU-100-00B
FU-100-00C
6A
011 (BLK)
021(BLK)
031(BLK)
AB POWERFLEX 4
R2
R1
2
11
T1(BLK)
T2 (BLK)
(BLK)
DRIVE MOTOR
110 (RED)
FROM LINE 28
CR - 001
CR - 002
120 (RED)
121 (RED)
122 (RED)
TO LINE 28
DOORS CLOSED
130 (RED)
TO LINE 42
VFD FAULT
FUSE 1A
STEP DOWN TRANSFORMER 480VAC - 120VAC
N (WHT)
160(BLK)
E-STOP
200(RED)
MCR 1
210 (BLK)
14
13
VAC L1
VAC L2
PLC 0/0
PLC 0/1
PLC 0/2
PLC 0/3
RUN
FAULT
FROM 122 (RED)
DOORS CLOSED
300(RED)
SOL 1
START
320 (RED)
PLC I/0
AC COM
STOP
340 (RED)
PLC I/1
FAULT RESET
360 (RED)
PLC I/2
PROX 01
MOTION SENSOR
380 (RED)
PLC I/3
400 (RED)
401 (RED)
PLC I/4
FROM 130 (RED)
PLC I/5
VFD FAULT
PROX 02
RIGHT DOOR CLOSED
440 (RED)
PROX 03
LEFT DOOR CLOSED
460 (RED)
A1
A2
THIS DRAWING IS THE PROPERTY OF DONTECH INC. AND SHALL NOT BE REPRODUCED, COPIED, NOR USED FOR ANY PURPOSE OTHER THAN THAT FOR WHICH IT IS PROVIDED. ALL RIGHTS, INCLUDING PATENTS, ARE RESERVED.
Dontech Industries, Inc.
DRAWN BY: WAC
DATE: 8/28/06
CHK'D BY:
SCALE: NTS
SUPERSEDES:
REMOVE ALL BURRS
TOLERANCES EXCEPTED WHERE NOTED
XXX ±/-
XX ±/-
ANGULAR ±/-
MAX. RADIUS
WELD SIZE
MACHINED SURFACES NOT TO EXCEED
MATERIAL:
TITLE: CONTROL PANEL WIRING DIAGRAM
PART NO. P-213
REV. 0
REV
DESCRIPTION
DATE
BY
ECO